A

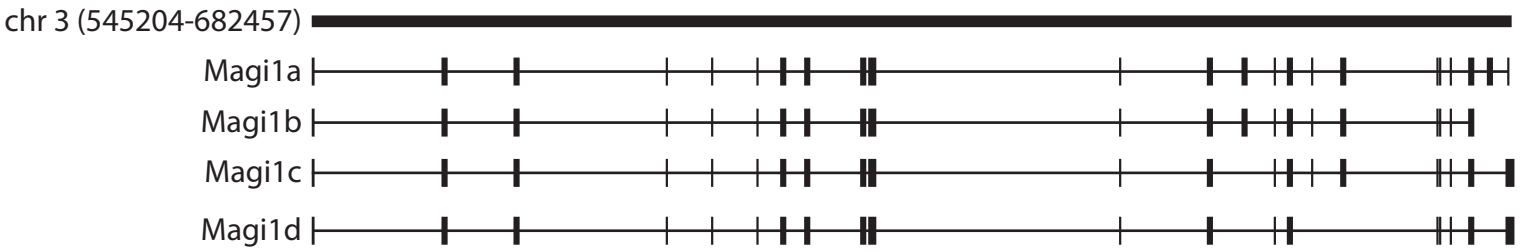
chr 3 (545204-682457)
Magi1a
Magi1b
Magi1c
Magi1d

B

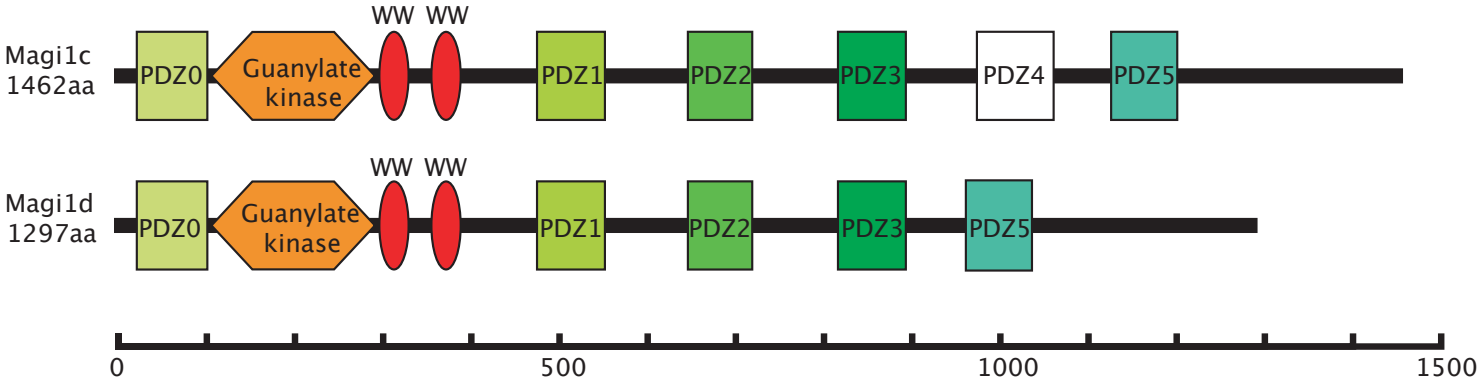
Magi1c
1462aa
PDZ0
Guanylate kinase
WW WW
PDZ1
PDZ2
PDZ3
PDZ4
PDZ5
Magi1d
1297aa
PDZ0
Guanylate kinase
WW WW
PDZ1
PDZ2
PDZ3
PDZ5
0
500
1000
1500

C

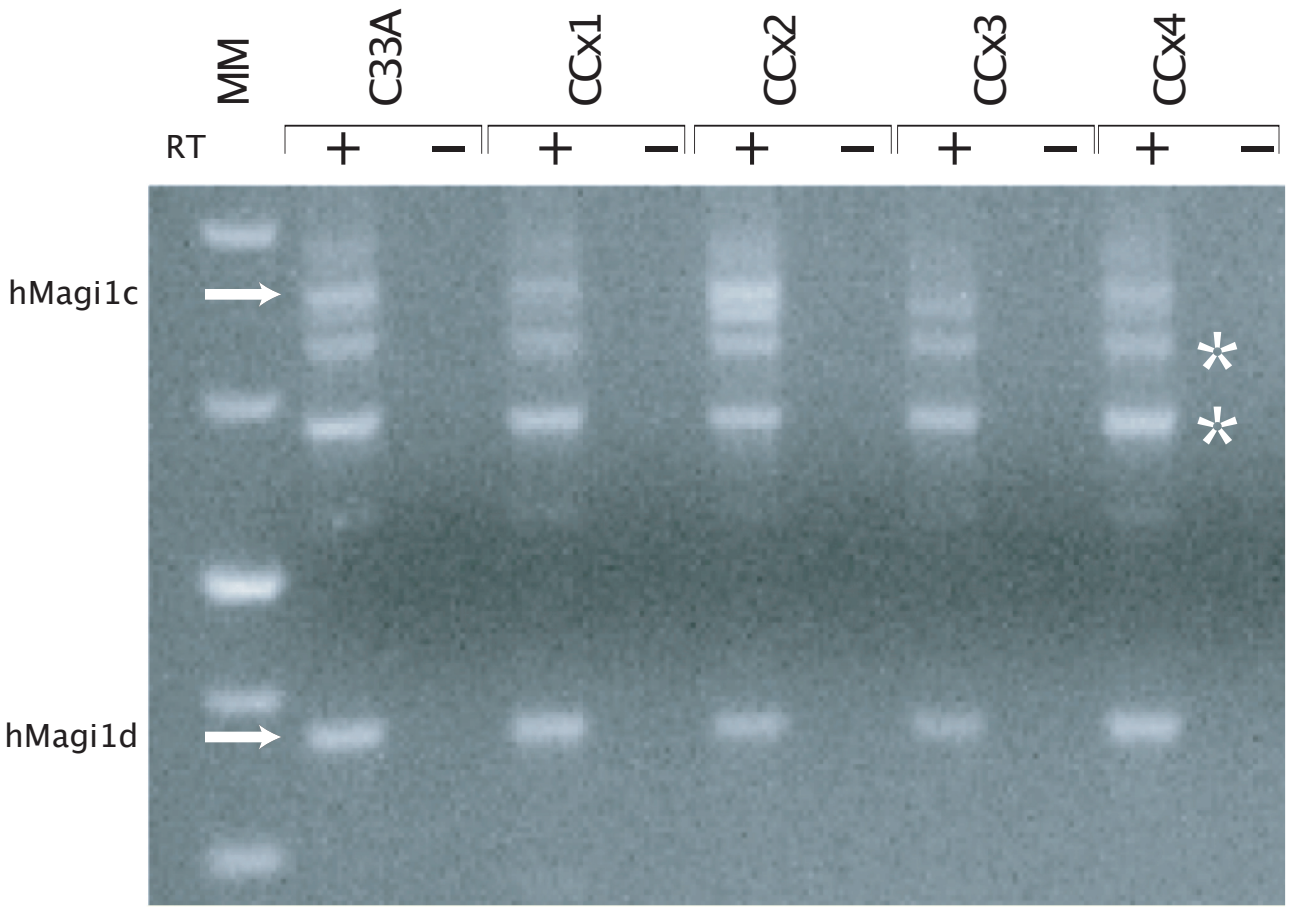
MM
C33A
CCx1
CCx2
CCx3
CCx4
RT
+ − + − + − + − + −
hMagi1c
hMagi1d
*
*